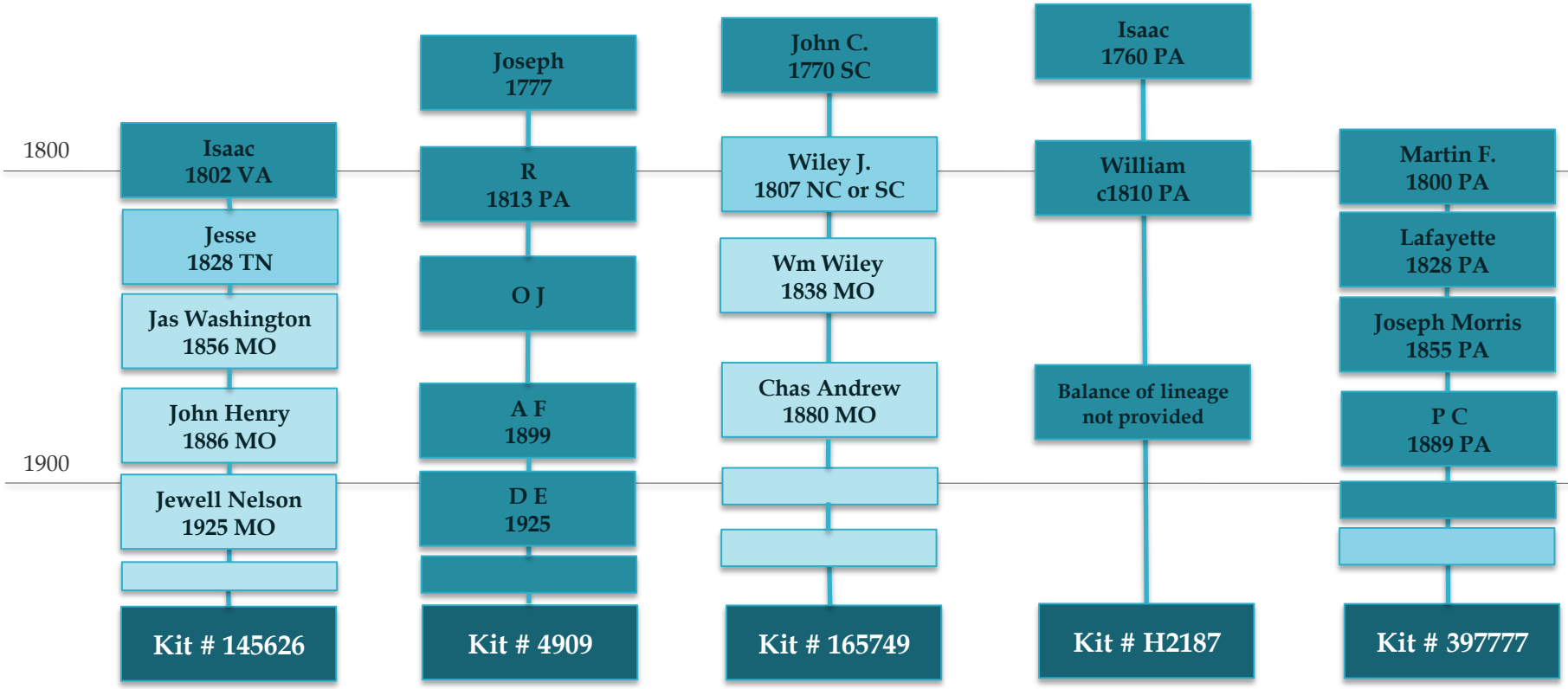John C. Webb [c1770 SC] DNA Group